FENDER MODEL "PRO-REVERB-AMP AA165" SCHEMATIC

THIS PRODUCT MANUFACTURED UNDER ONE OR MORE OF THE FOLLOWING U.S. PATENTS –
CIRCUIT PATENT # 2817708, # 2973681
DESIGN PATENT # 193858
& PATENTS PENDING

D-FE

NOTICE

1. VOLTAGES READ TO GROUND WITH ELECTRONIC VOLTMETER VALUES SHOWN + OR – 20 %
2. ALL RESISTORS ½ WATT 10 % TOLERANCE IF NOT SPECIFIED.
3. ALL CAPACITORS AT LEAST 400 VOLT RATING IF NOT SPECIFIED

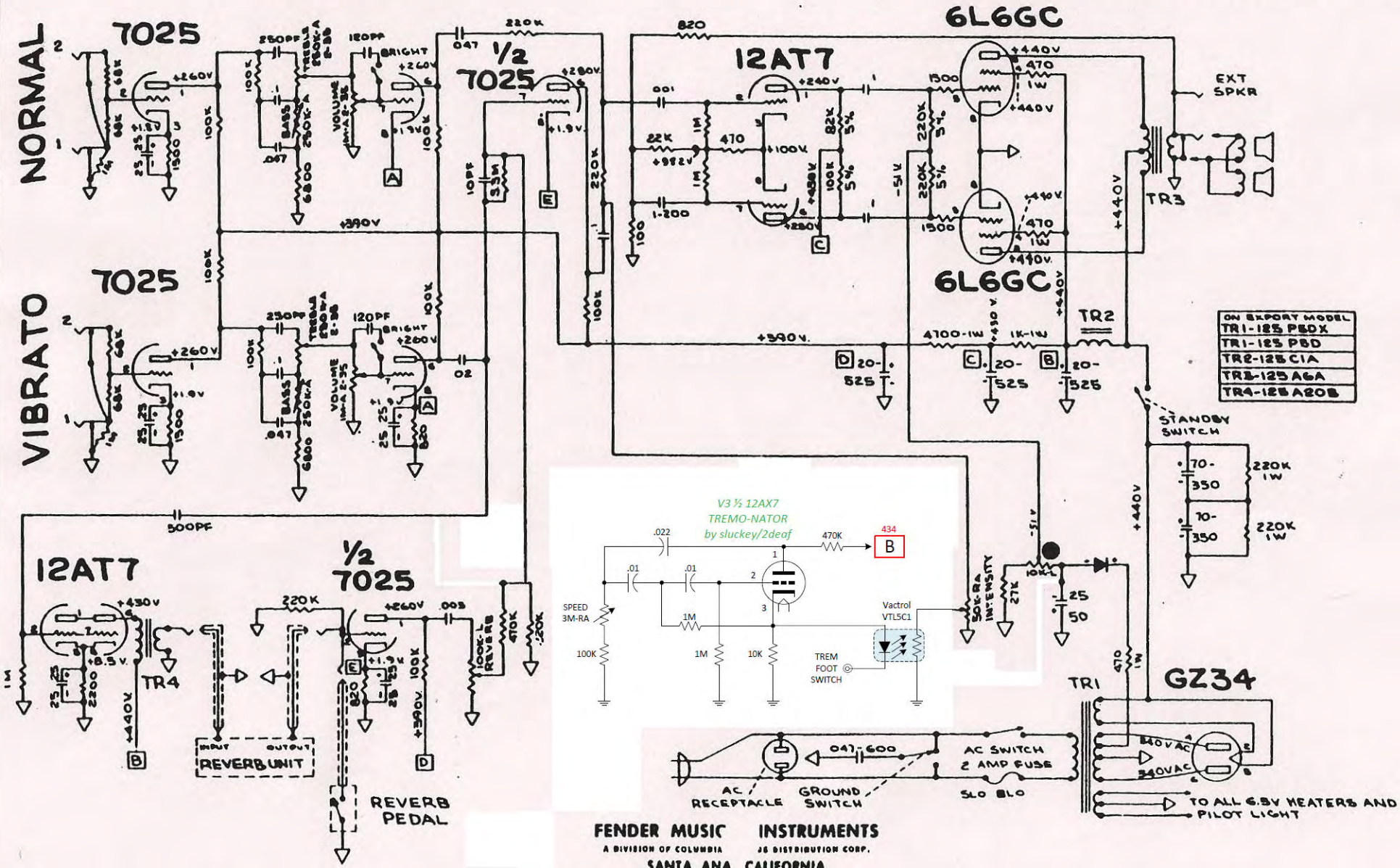

ON EXPORT MODEL
TR1-125 P5DX
TR1-125 P5D
TR2-125 C1A
TR3-125 A6A
TR4-125 A20B

FENDER MUSIC INSTRUMENTS
A DIVISION OF COLUMBIA JS DISTRIBUTION CORP.
SANTA ANA CALIFORNIA

FENDER MODEL "PRO-REVERB-AMP AA165" LAYOUT

D-FE

NOTICE
VOLTAGES READ TO GROUND WITH ELECTRONIC VOLTMETER VALUES SHOWN + OR - 20%

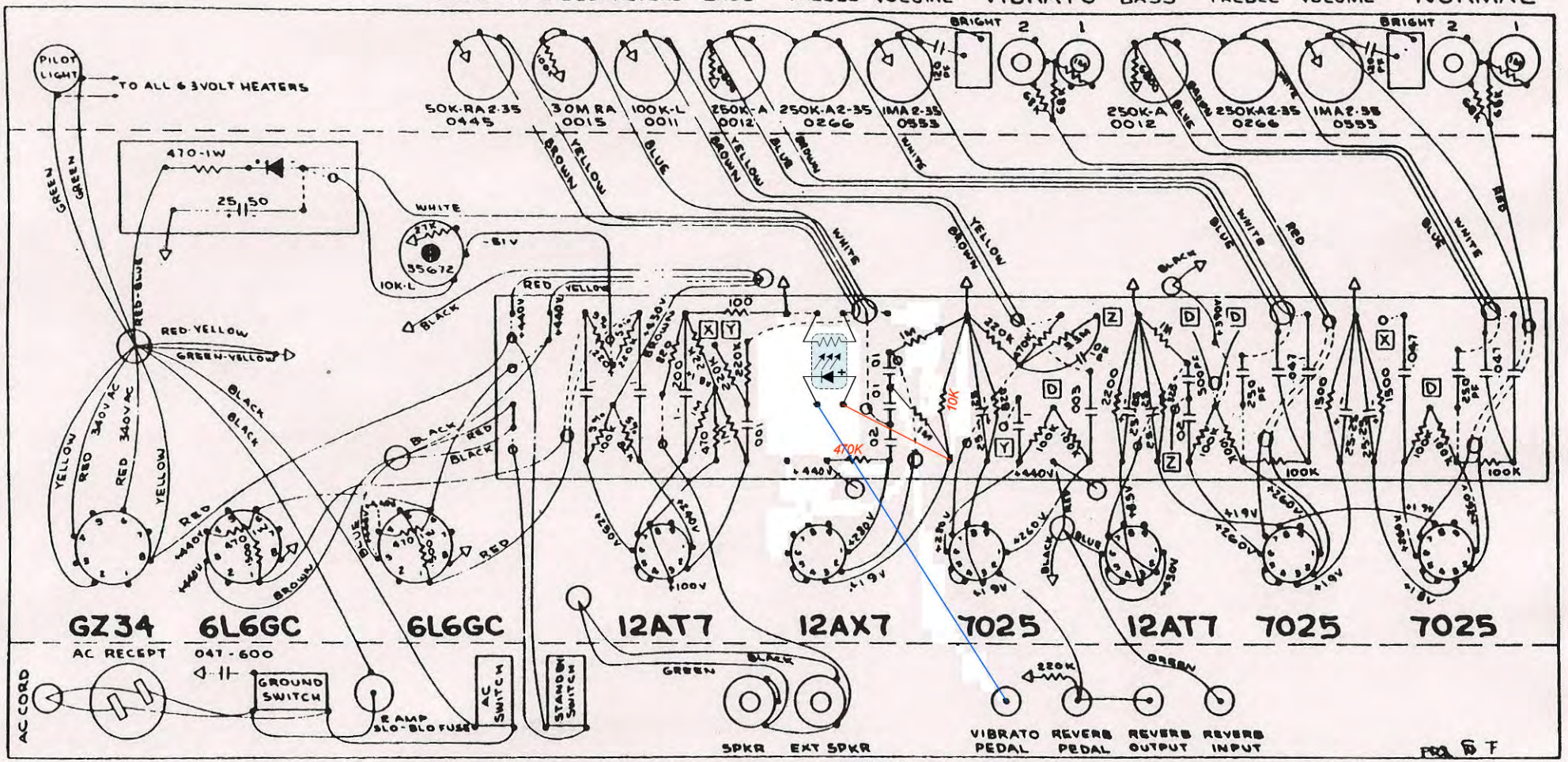

NOTE: ALL RESISTORS ½ WATT 10% TOLERANCE, IF NOT SPECIFIED.

NOTE: ALL CAPACITORS AT LEAST 400 VOLT RATING IF NOT SPECIFIED.

FENDER MUSICAL INSTRUMENTS
A DIVISION OF COLUMBIA RECORDS DISTRIBUTION CORP.
SANTA ANA, CALIFORNIA
U.S.A.